Product Reference Manual
SKU: A000067

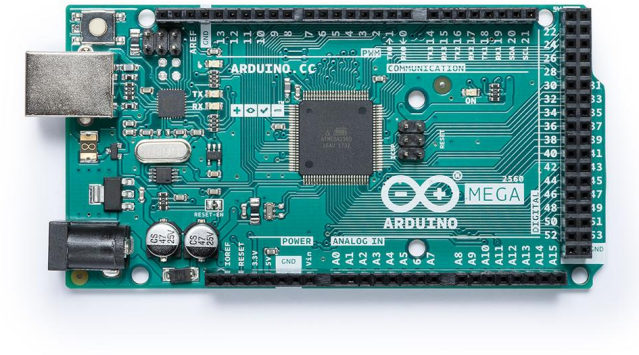

Description

Arduino® Mega 2560 is an exemplary development board dedicated for building extensive applications as compared to other maker boards by Arduino. The board accommodates the ATmega2560 microcontroller, which operates at a frequency of 16 MHz. The board contains 54 digital input/output pins, 16 analog inputs, 4 UARTs (hardware serial ports), a USB connection, a power jack, an ICSP header, and a reset button.

Target Areas

3D Printing, Robotics, Maker

Features

- **ATmega2560 Processor**
  - Up to 16 MIPS Throughput at 16MHz
  - 256k bytes (of which 8k is used for the bootloader)
  - 4k bytes EEPROM
  - 8k bytes Internal SRAM
  - 32 × 8 General Purpose Working Registers
  - Real Time Counter with Separate Oscillator
  - Four 8-bit PWM Channels
  - Four Programmable Serial USART
  - Controller/Peripheral SPI Serial Interface
- **ATmega16U2**
  - Up to 16 MIPS Throughput at 16 MHz
  - 16k bytes ISP Flash Memory
  - 512 bytes EEPROM
  - 512 bytes SRAM
  - USART with SPI master only mode and hardware flow control (RTS/CTS)
  - Master/Slave SPI Serial Interface
- **Sleep Modes**
  - Idle
  - ADC Noise Reduction
  - Power-save
  - Power-down
  - Standby
  - Extended Standby
- **Power**
  - USB Connection
  - External AC/DC Adapter
- **I/O**
  - 54 Digital
  - 16 Analog
  - 15 PWM Output

Contents

1 The Board **5**
1.1 Application Examples 5
1.2 Accessories 5
1.3 Related Products 5
2 Ratings **6**
2.1 Recommended Operating Conditions 6
2.2 Power Consumption 6
3 Functional Overview **6**
3.1 Block Diagram 6
3.2 Board Topology 7
3.3 Processor 8
3.4 Power Tree 8
4 Board Operation **9**
4.1 Getting Started - IDE 9
4.2 Getting Started - Arduino Web Editor 9
4.3 Sample Sketches 9
4.4 Online Resources 9
5 Connector Pinouts **10**
5.1 Analog 11
5.2 Digital 11
5.3 ATMEGA16U2 JP5 13
5.4 ATMEGA16U2 ICSP1 13
5.5 Digital Pins D22 - D53 LHS 13
5.6 Digital Pins D22 - D53 RHS 14
6 Mechanical Information **14**
6.1 Board Outline 14
6.2 Board Mount Holes 15
7 Declaration of Conformity CE DoC (EU) **15**
8 Declaration of Conformity to EU RoHS & REACH 211 01/19/2021
9 Conflict Minerals Declaration **17**
10 FCC Caution **17**
11 Company Information **18**
12 Reference Documentation **18**

13 Revision History **18**

1 The Board

Arduino® Mega 2560 is a successor board of Arduino Mega, it is dedicated to applications and projects that require large number of input output pins and the use cases which need high processing power. The Arduino® Mega 2560 comes with a much larger set of IOs when we compare it with traditional Uno board considering the form factor of both the boards.

1.1 Application Examples

- **Robotics**: Featuring the high processing capacitity, the Arduino Mega 2560 can handle the extensive robotic applications. It is compatible with the motor controller shield that enables it to control multiple motors at an instance, thus making it perfect of robotic applications. The large number of I/O pins can accommodate many robotic sensors as well.
- **3D Printing**: Algorithms play a significant role in implementation of 3D printers. Arduino Mega 2560 has the power to process these complex algorithms required for 3D printing. Additionally, the slight changes to the code is easily possible with the Arduino IDE and thus 3D printing programs can be customized according to user requirements.
- **Wi-Fi**: Integrating wireless functionality enhances the utility of the applications. Arduino Mega 2560 is compatible with WiFi shields hence allowing the wireless features for the applications in 3D printing and Robotics.

1.2 Accessories

1.3 Related Products

- Arduino® Uno Rev 3
- Arduino® Nano
- Arduino® DUE without headers

2 Ratings

2.1 Recommended Operating Conditions

Symbol	Description	Min	Max
TOP	Operating temperature:	-40 °C	85 °C

2.2 Power Consumption

Symbol	Description	Min	Typ	Max	Unit
PWRIN	Input supply from power jack		TBC		mW
USB VCC	Input supply from USB		TBC		mW
VIN	Input from VIN pad		TBC		mW

3 Functional Overview

3.1 Block Diagram

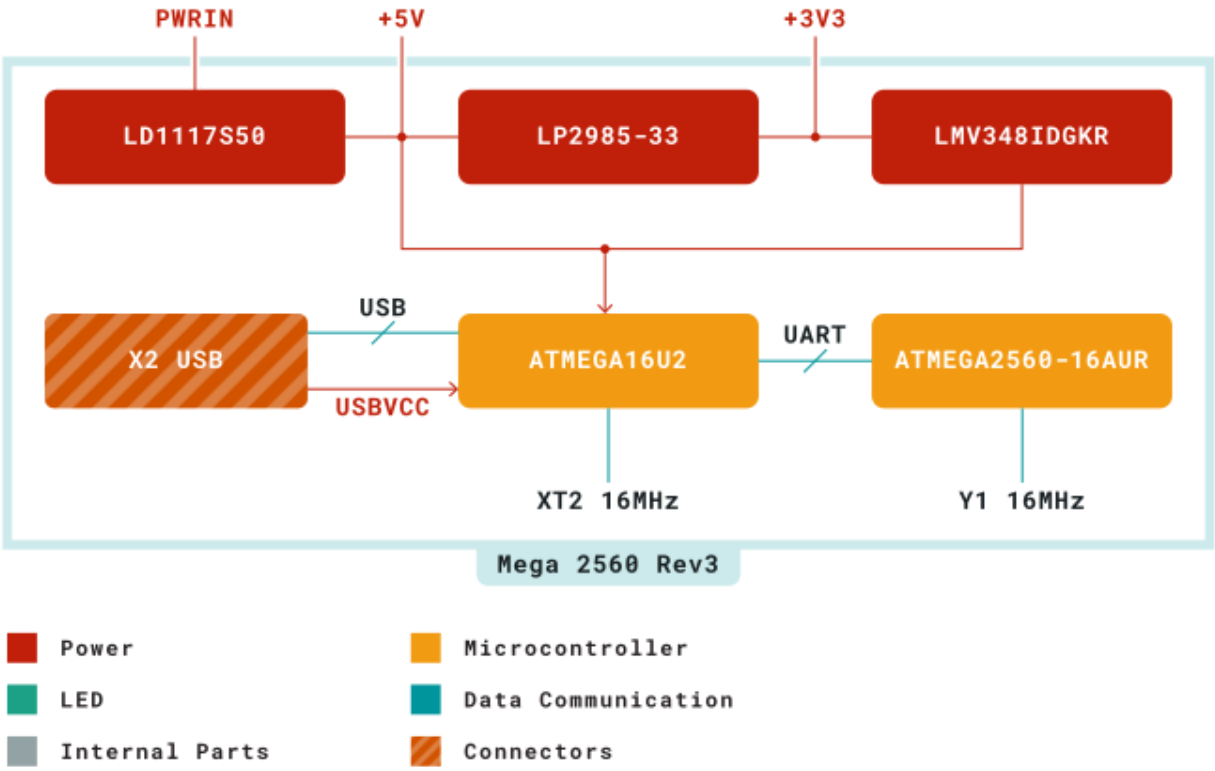

Arduino MEGA Block Diagram

3.2 Board Topology

Front View

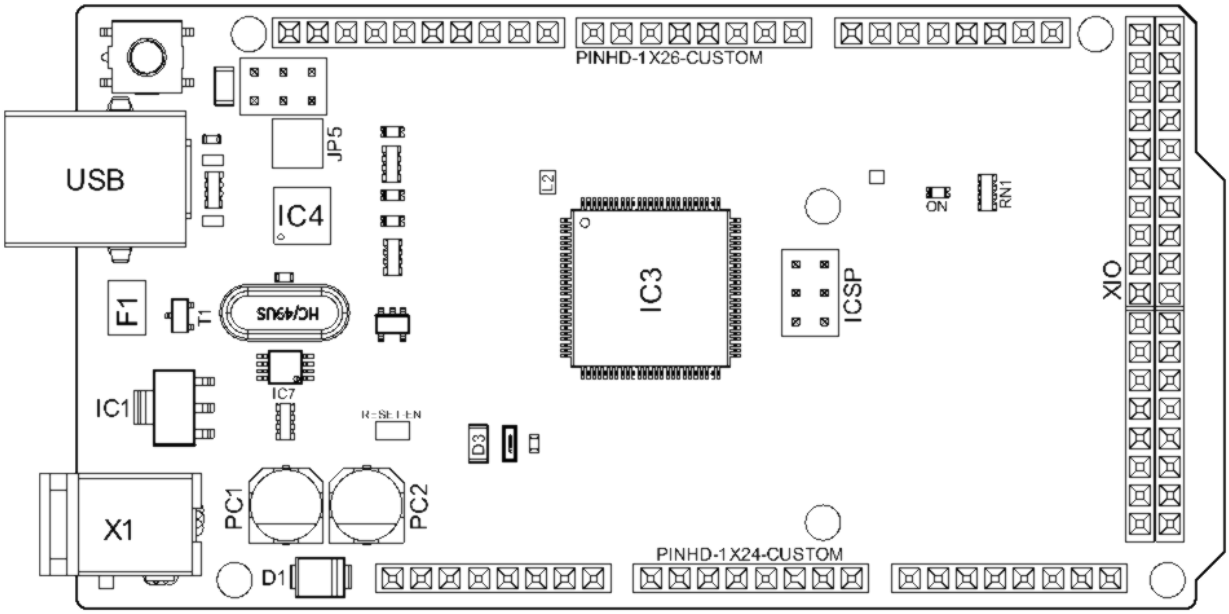

Arduino MEGA Top View

Ref.	Description	Ref.	Description
USB	USB B Connector	F1	Chip Capacitor
IC1	5V Linear Regulator	X1	Power Jack Connector
JP5	Plated Holes	IC4	ATmega16U2 chip
PC1	Electrolytic Alumninum Capacitor	PC2	Electrolytic Alumninum Capacitor
D1	General Purpose Rectifier	D3	General Purpose Diode
L2	Fixed Inductor	IC3	ATmega2560 chip
ICSP	Connector Header	ON	Green LED
RN1	Resistor Array	XIO	Connector

3.3 Processor

Primary processor of Arduino Mega 2560 Rev3 board is ATmega2560 chip which operates at a frequency of 16 MHz. It accommodates a large number of input and output lines which gives the provision of interfacing many external devices. At the same time the operations and processing is not slowed due to its significantly larger RAM than the other processors. The board also features a USB serial processor ATmega16U2 which acts an interface between the USB input signals and the main processor. This increases the flexibility of interfacing and connecting peripherals to the Arduino Mega 2560 Rev 3 board.

3.4 Power Tree

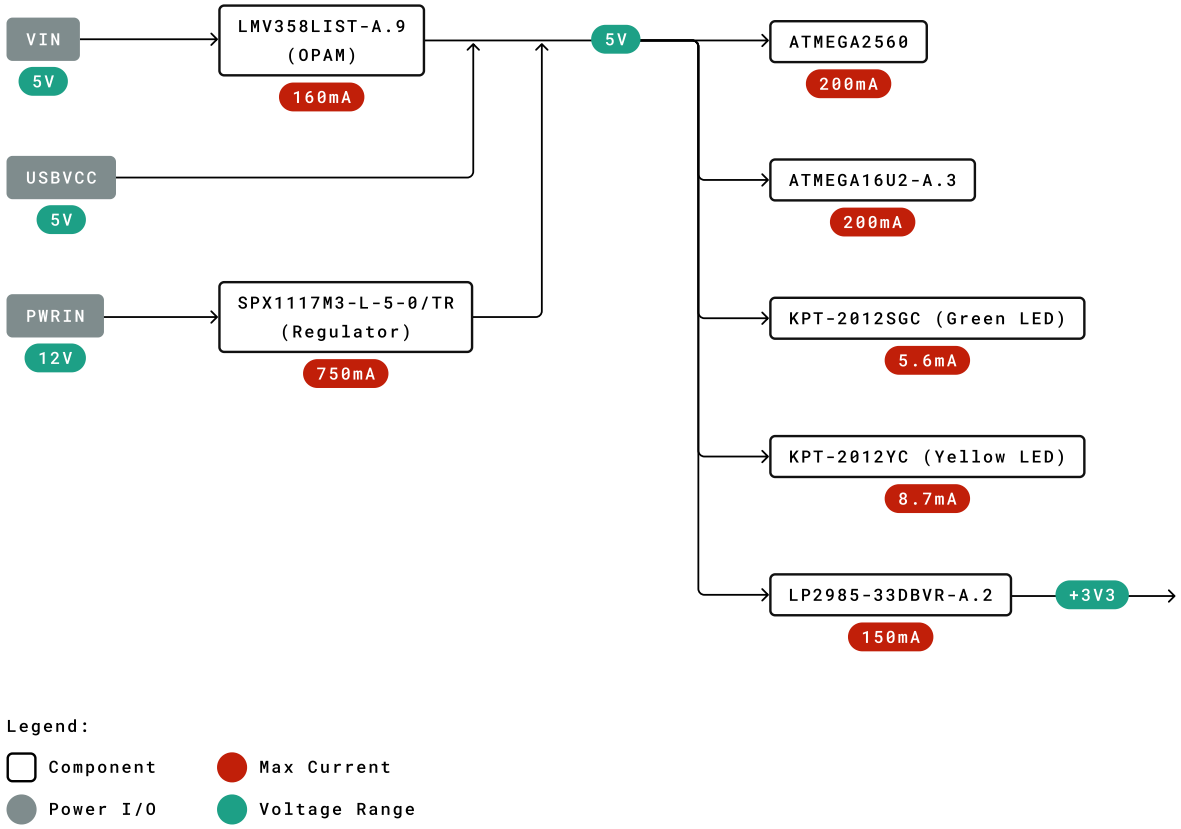

Power Tree

4 Board Operation

4.1 Getting Started - IDE

If you want to program your Arduino® MEGA 2560 while offline you need to install the Arduino® Desktop IDE **[1]** To connect the Arduino® MEGA 2560 to your computer, you'll need a Type-B USB cable. This also provides power to the board, as indicated by the LED.

4.2 Getting Started - Arduino Web Editor

All Arduino® boards, including this one, work out-of-the-box on the Arduino® Web Editor **[2]**, by just installing a simple plugin.

The Arduino® Web Editor is hosted online, therefore it will always be up-to-date with the latest features and support for all boards. Follow **[3]** to start coding on the browser and upload your sketches onto your board.

4.3 Sample Sketches

Sample sketches for the Arduino® MEGA 2560 can be found either in the "Examples" menu in the Arduino® IDE

4.4 Online Resources

Now that you have gone through the basics of what you can do with the board you can explore the endless possibilities it provides by checking exciting projects on ProjectHub **[5]**, the Arduino® Library Reference **[6]** and the online store **[7]** where you will be able to complement your board with sensors, actuators and more.

5 Connector Pinouts

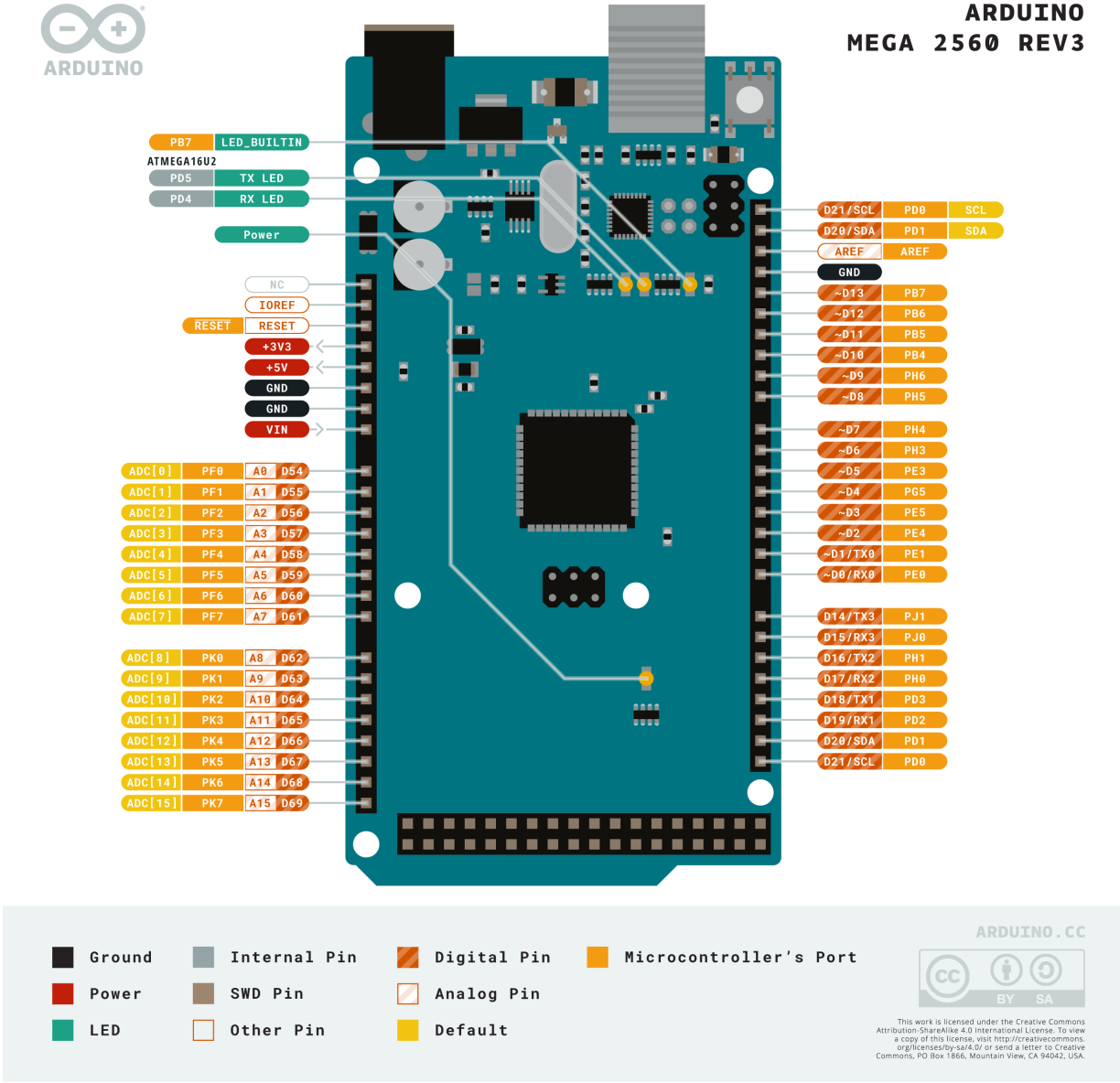

Arduino Mega Pinout

5.1 Analog

Pin	Function	Type	Description
1	NC	NC	Not Connected
2	IOREF	IOREF	Reference for digital logic V - connected to 5V
3	Reset	Reset	Reset
4	+3V3	Power	+3V3 Power Rail
5	+5V	Power	+5V Power Rail
6	GND	Power	Ground
7	GND	Power	Ground
8	VIN	Power	Voltage Input
9	A0	Analog	Analog input 0 /GPIO
10	A1	Analog	Analog input 1 /GPIO
11	A2	Analog	Analog input 2 /GPIO
12	A3	Analog	Analog input 3 /GPIO
13	A4	Analog	Analog input 4 /GPIO
14	A5	Analog	Analog input 5 /GPIO
15	A6	Analog	Analog input 6 /GPIO
16	A7	Analog	Analog input 7 /GPIO
17	A8	Analog	Analog input 8 /GPIO
18	A9	Analog	Analog input 9 /GPIO
19	A10	Analog	Analog input 10 /GPIO
20	A11	Analog	Analog input 11 /GPIO
21	A12	Analog	Analog input 12 /GPIO
22	A13	Analog	Analog input 13 /GPIO
23	A14	Analog	Analog input 14 /GPIO
24	A15	Analog	Analog input 15 /GPIO

5.2 Digital

Pin	Function	Type	Description
1	D21/SCL	Digital Input/I2C	Digital input 21/I2C Dataline
2	D20/SDA	Digital Input/I2C	Digital input 20/I2C Dataline
3	AREF	Digital	Analog Reference Voltage
4	GND	Power	Ground
5	D13	Digital/GPIO	Digital input 13/GPIO
6	D12	Digital/GPIO	Digital input 12/GPIO
7	D11	Digital/GPIO	Digital input 11/GPIO
8	D10	Digital/GPIO	Digital input 10/GPIO
9	D9	Digital/GPIO	Digital input 9/GPIO
10	D8	Digital/GPIO	Digital input 8/GPIO
11	D7	Digital/GPIO	Digital input 7/GPIO
12	D6	Digital/GPIO	Digital input 6/GPIO
13	D5	Digital/GPIO	Digital input 5/GPIO
14	D4	Digital/GPIO	Digital input 4/GPIO

Pin	Function	Type	Description
15	D3	Digital/GPIO	Digital input 3/GPIO
16	D2	Digital/GPIO	Digital input 2/GPIO
17	D1/TX0	Digital/GPIO	Digital input 1 /GPIO
18	D0/Tx1	Digital/GPIO	Digital input 0 /GPIO
19	D14	Digital/GPIO	Digital input 14 /GPIO
20	D15	Digital/GPIO	Digital input 15 /GPIO
21	D16	Digital/GPIO	Digital input 16 /GPIO
22	D17	Digital/GPIO	Digital input 17 /GPIO
23	D18	Digital/GPIO	Digital input 18 /GPIO
24	D19	Digital/GPIO	Digital input 19 /GPIO
25	D20	Digital/GPIO	Digital input 20 /GPIO
26	D21	Digital/GPIO	Digital input 21 /GPIO

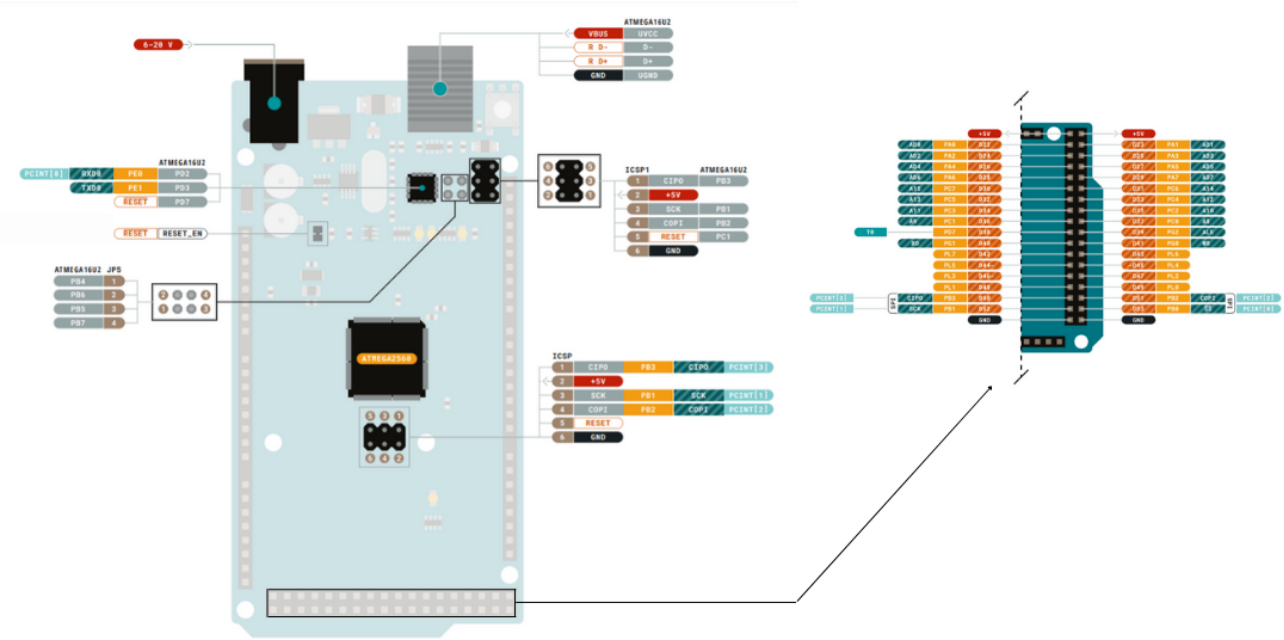

Arduino Mega Pinout

5.3 ATMEGA16U2 JP5

Pin	Function	Type	Description
1	PB4	Internal	Serial Wire Debug
2	PB6	Internal	Serial Wire Debug
3	PB5	Internal	Serial Wire Debug
4	PB7	Internal	Serial Wire Debug

5.4 ATMEGA16U2 ICSP1

Pin	Function	Type	Description
1	CIPO	Internal	Controller In Peripheral Out
2	+5V	Internal	Power Supply of 5V
3	SCK	Internal	Serial Clock
4	COPI	Internal	Controller Out Peripheral In
5	RESET	Internal	Reset
6	GND	Internal	Ground

5.5 Digital Pins D22 - D53 LHS

Pin	Function	Type	Description
1	+5V	Power	Power Supply of 5V
2	D22	Digital	Digital input 22/GPIO
3	D24	Digital	Digital input 24/GPIO
4	D26	Digital	Digital input 26/GPIO
5	D28	Digital	Digital input 28/GPIO
6	D30	Digital	Digital input 30/GPIO
7	D32	Digital	Digital input 32/GPIO
8	D34	Digital	Digital input 34/GPIO
9	D36	Digital	Digital input 36/GPIO
10	D38	Digital	Digital input 38/GPIO
11	D40	Digital	Digital input 40/GPIO
12	D42	Digital	Digital input 42/GPIO
13	D44	Digital	Digital input 44/GPIO
14	D46	Digital	Digital input 46/GPIO
15	D48	Digital	Digital input 48/GPIO
16	D50	Digital	Digital input 50/GPIO
17	D52	Digital	Digital input 52/GPIO
18	GND	Power	Ground

5.6 Digital Pins D22 - D53 RHS

Pin	Function	Type	Description
1	+5V	Power	Power Supply of 5V
2	D23	Digital	Digital input 23/GPIO
3	D25	Digital	Digital input 25/GPIO
4	D27	Digital	Digital input 27/GPIO
5	D29	Digital	Digital input 29/GPIO
6	D31	Digital	Digital input 31/GPIO
7	D33	Digital	Digital input 33/GPIO
8	D35	Digital	Digital input 35/GPIO
9	D37	Digital	Digital input 37/GPIO
10	D39	Digital	Digital input 39/GPIO
11	D41	Digital	Digital input 41/GPIO
12	D43	Digital	Digital input 43/GPIO
13	D45	Digital	Digital input 45/GPIO
14	D47	Digital	Digital input 47/GPIO
15	D49	Digital	Digital input 49/GPIO
16	D51	Digital	Digital input 51/GPIO
17	D53	Digital	Digital input 53/GPIO
18	GND	Power	Ground

6 Mechanical Information

6.1 Board Outline

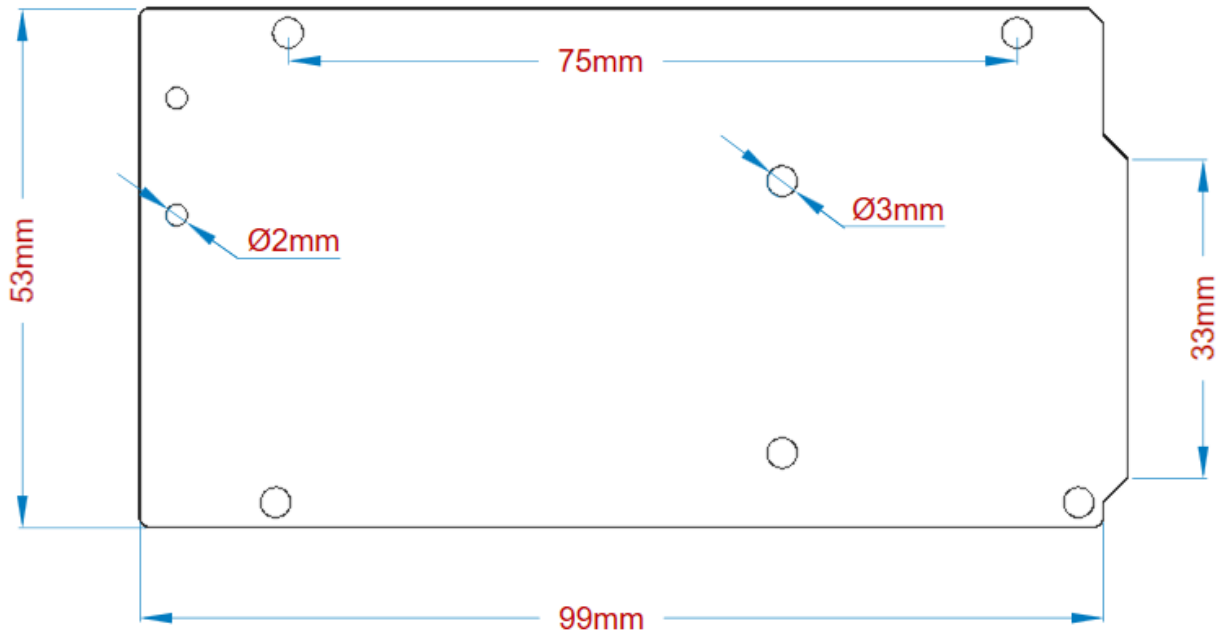

Arduino Mega Outline

6.2 Board Mount Holes

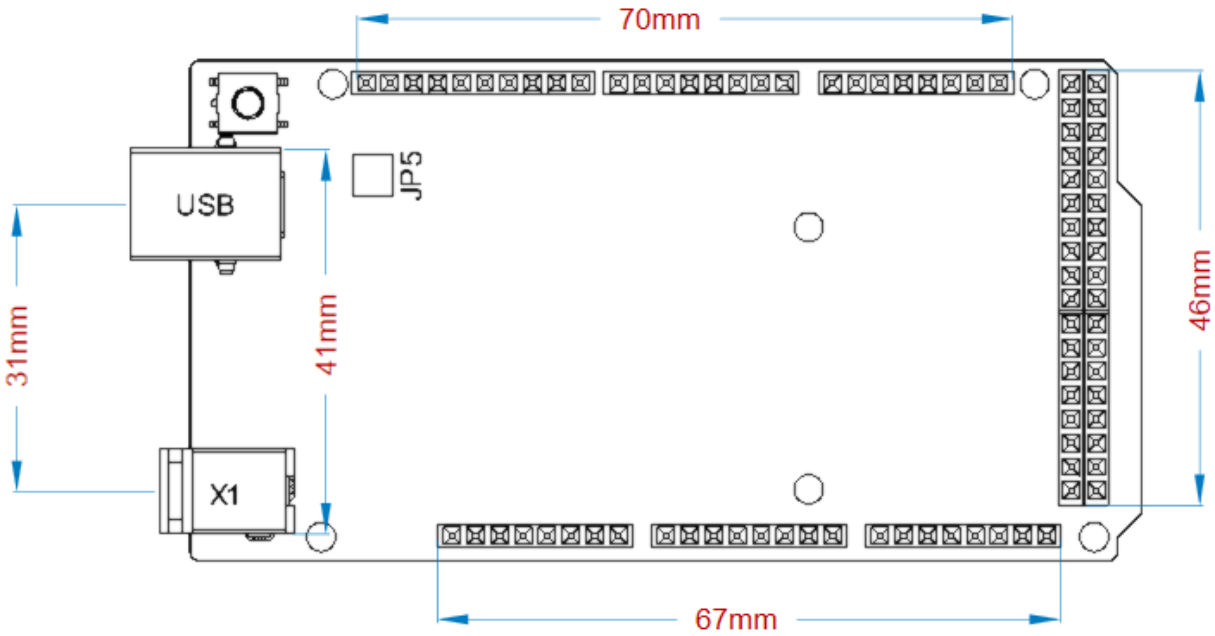

Arduino Mega Mount Holes

Certifications

7 Declaration of Conformity CE DoC (EU)

We declare under our sole responsibility that the products above are in conformity with the essential requirements of the following EU Directives and therefore qualify for free movement within markets comprising the European Union (EU) and European Economic Area (EEA).

8 Declaration of Conformity to EU RoHS & REACH 211 01/19/2021

Arduino boards are in compliance with RoHS 2 Directive 2011/65/EU of the European Parliament and RoHS 3 Directive 2015/863/EU of the Council of 4 June 2015 on the restriction of the use of certain hazardous substances in electrical and electronic equipment.

Substance	Maximum Limit (ppm)
Lead (Pb)	1000
Cadmium (Cd)	100
Mercury (Hg)	1000
Hexavalent Chromium (Cr6+)	1000
Poly Brominated Biphenyls (PBB)	1000
Poly Brominated Diphenyl ethers (PBDE)	1000
Bis(2-Ethylhexyl} phthalate (DEHP)	1000
Benzyl butyl phthalate (BBP)	1000
Dibutyl phthalate (DBP)	1000
Diisobutyl phthalate (DIBP)	1000

Exemptions : No exemptions are claimed.

Arduino Boards are fully compliant with the related requirements of European Union Regulation (EC) 1907 /2006 concerning the Registration, Evaluation, Authorization and Restriction of Chemicals (REACH). We declare none of the SVHCs (https://echa.europa.eu/web/guest/candidate-list-table), the Candidate List of Substances of Very High Concern for authorization currently released by ECHA, is present in all products (and also package) in quantities totaling in a concentration equal or above 0.1%. To the best of our knowledge, we also declare that our products do not contain any of the substances listed on the "Authorization List" (Annex XIV of the REACH regulations) and Substances of Very High Concern (SVHC) in any significant amounts as specified by the Annex XVII of Candidate list published by ECHA (European Chemical Agency) 1907 /2006/EC.

9 Conflict Minerals Declaration

As a global supplier of electronic and electrical components, Arduino is aware of our obligations with regards to laws and regulations regarding Conflict Minerals, specifically the Dodd-Frank Wall Street Reform and Consumer Protection Act, Section 1502. Arduino does not directly source or process conflict minerals such as Tin, Tantalum, Tungsten, or Gold. Conflict minerals are contained in our products in the form of solder, or as a component in metal alloys. As part of our reasonable due diligence Arduino has contacted component suppliers within our supply chain to verify their continued compliance with the regulations. Based on the information received thus far we declare that our products contain Conflict Minerals sourced from conflict-free areas.

10 FCC Caution

Any Changes or modifications not expressly approved by the party responsible for compliance could void the user's authority to operate the equipment.

This device complies with part 15 of the FCC Rules. Operation is subject to the following two conditions:

(1) This device may not cause harmful interference

(2) this device must accept any interference received, including interference that may cause undesired operation.

FCC RF Radiation Exposure Statement:

1. This Transmitter must not be co-located or operating in conjunction with any other antenna or transmitter.
2. This equipment complies with RF radiation exposure limits set forth for an uncontrolled environment.
3. This equipment should be installed and operated with minimum distance 20cm between the radiator & your body.

English: User manuals for licence-exempt radio apparatus shall contain the following or equivalent notice in a conspicuous location in the user manual or alternatively on the device or both. This device complies with Industry Canada licence-exempt RSS standard(s). Operation is subject to the following two conditions:

(1) this device may not cause interference

(2) this device must accept any interference, including interference that may cause undesired operation of the device.

French: Le présent appareil est conforme aux CNR d'Industrie Canada applicables aux appareils radio exempts de licence. L'exploitation est autorisée aux deux conditions suivantes :

(1) l' appareil nedoit pas produire de brouillage

(2) l'utilisateur de l'appareil doit accepter tout brouillage radioélectrique subi, même si le brouillage est susceptible d'en compromettre le fonctionnement.

IC SAR Warning:

English This equipment should be installed and operated with minimum distance 20 cm between the radiator and your body.

French: Lors de l' installation et de l' exploitation de ce dispositif, la distance entre le radiateur et le corps est d 'au moins 20 cm.

Important: The operating temperature of the EUT can't exceed 85°C and shouldn't be lower than -40°C.

Hereby, Arduino S.r.l. declares that this product is in compliance with essential requirements and other relevant provisions of Directive 201453/EU. This product is allowed to be used in all EU member states.

11 Company Information

Company name	Arduino S.r.l.
Company Address	Arduino SRL, Via Andrea Appiani 25, 20900 Monza MB, Italy

12 Reference Documentation

Ref	Link
Arduino IDE (Desktop)	https://www.arduino.cc/en/Main/Software
Arduino IDE (Cloud)	https://create.arduino.cc/editor
Cloud IDE Getting Started	https://create.arduino.cc/projecthub/Arduino_Genuino/getting-started-with-arduino-web-editor-4b3e4a
Arduino Pro Website	https://www.arduino.cc/pro
Project Hub	https://create.arduino.cc/projecthub?by=part&part_id=11332&sort=trending
Library Reference	https://www.arduino.cc/reference/en/libraries/
Online Store	https://store.arduino.cc/

13 Revision History

Date	Revision	Changes
29/09/2020	1	First Release